www.ervan.cn

High Power Weather-proof

T21

• Universal Application

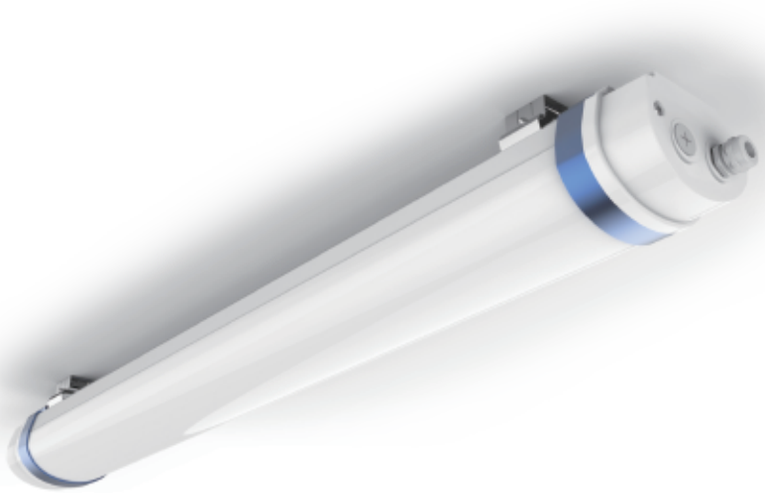

T21

High Power Weather-proof

(Applying) RoHS IP 65 PC 850 °C IK08 Rated voltage 220-240V Frequency 50-60Hz +40°C -20°C

1.Features

-IP65 / IK08
-SDCM 3 or 6
-Up to 150Lm/w
-Can be linkable
-Non-flicker available
-Up to 70% energy saving
-Fast fit and zero maintenance
-72,000h (L70B10 / Ta 25℃) 5 years warranty
-Wide use in commercial and industrial area
-Emergency / Microwave / Dimmable easily realized

IP65 IK08 CLASS I 5 years warranty RG0

1 Fast Fit

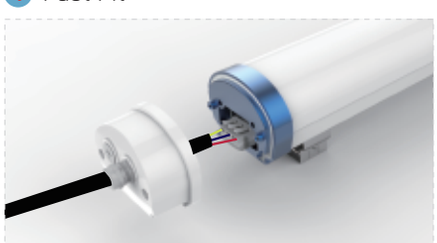

2 Terminal connector

3 Phase Switch optional

4 Function easily realized

5 IP65/IK08

6 SDCM 3 or 6/RG0

2.Application

- Office
  Corridors and stairways,Meeting rooms,Entrance areas,
  Open-plan offices,Offices,Sanitary areas
- Education
  Classrooms,Cafeteria,Auditorium ,Sports halls
- Architectural
  Exhibition center ,Library,Art Museum
  Concert hall,Museum
- Health & Care
  Normal care,Intensive care,OR sector,
  Examination rooms,Sanitary areas
- Shop & Retial
  Shopping mall,Supermarkets,Retail stores

3.Product Dimension

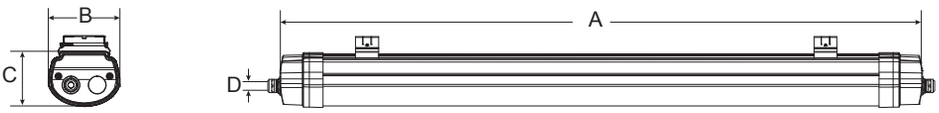

Size A(mm)	Size B(mm)	Size C(mm)	Size D(mm)
600	109	84	12
1200	109	84	12
1500	109	84	12

4. Parameter

Model NO. / Length	Power (W)	Clear Lumens	Cover Lm/W
T21 600mm	40	5200	130
T21 1200mm	40	5200	130
T21 1200mm	50	6500	130
T21 1200mm	60	7800	130
T21 1500mm	60	7800	130
T21 1500mm	80	10400	130
T21 1500mm	100	13000	130

Dimmable Emergency Motion sensor

Light Source ： 2835 SDCM＜3 or 6

CRI Range ： 80 / 90 / 95

CCT Range ： WW(3000K) NW(4000K) DW(5000K) CW(6500K)

AC Input ： 220-240V 50/60Hz

L70B10 @Ta 25℃ : 72000h L70B50 @Ta 25℃ : 81000h

Beam Angle ： 120°

Light Efficiency ： 130Lm/W, 150Lm/W

Size(mm) ： 109(W)*84(H)

Waterproof ： IP65 & IK08

Recommended Installation Height ： 2-15M

PF:≥0.93 THD<20% Power Efficiency:≥0.90

Temperature : (Storage : -40~+85°C) (Operating : -20~+40°C)

Notes:

- Frosted cover is 10Lm/W less than clear cover, above lumens based on 4000K Ra : 80
- All values in +25°C ambient temperature, luminous flux tolerance +-5%, output power tolerance +-5%.

5.Accessory part number matrix

01 02 03 04

Mounting Accessories

Accessories	IMAGE	DESIGNTION	MATERIAL	DESCRIPTION	QUANTITY	ACCESSORY USE
Standard	01	Metal Bracket	Stainless steel	75.6x35x33.3mm	2PCS	Used for the absorption of suspending and Ceiling Mounted.
Standard	02	Screw	Stainless steel	4X20mm	4PCS	Used for the absorption of Ceiling Mounted.
Standard	03	M20 Connector	PC	Length of thread:8mm	1PCS	Dimension : 8mm<Cable<12mm
Optional	04	Suspending Cable	Stainless steel	1M/1.2M/1.5M/3M	2PCS	Used for the absorption of suspending.

6.Standard Installation

Three-core

Five-core

Note: The torque standard of holder screws is 8.5±0.5kgf.

- How many LED fixtures we could connect on one phase.

Input Voltage	Max Qty	Size Cable
100VAC/40W	9	optional
100VAC/50W	7	optional
100VAC/60W	6	optional
100VAC/80W	4	optional
100VAC/80W	3	optional

Input Voltage	Max Qty	Size Cable
230VAC/40W	18	optional
230VAC/50W	15	optional
230VAC/60W	12	optional
230VAC/80W	9	optional
230VAC/100W	7	optional

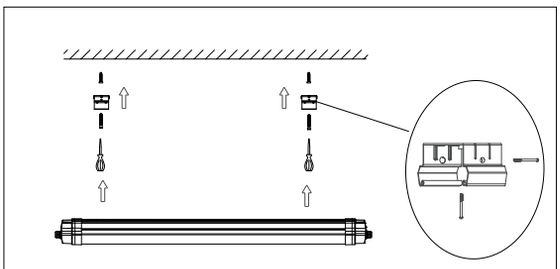

Fig. 1

1 Ceiling Mounted

A : Make a right position and screw hole

B: Screw the clip on the ceiling tightly

C. Connect the wire by junction box after power-off.

D: Adjust the position of the fixture and clean it.

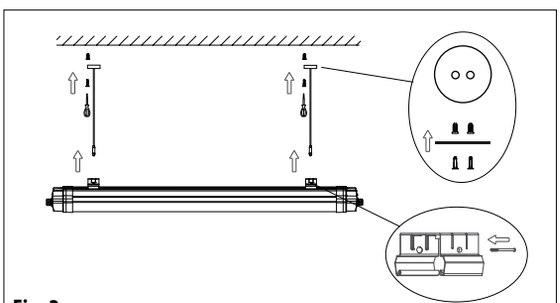

Fig. 2

2 Suspending

A : Make a right position and screw hole

B : Screw the steel cable onto the ceiling

C. Connect the wire by junction box after power-off.

D: Adjust the position of the fixture and clean it.

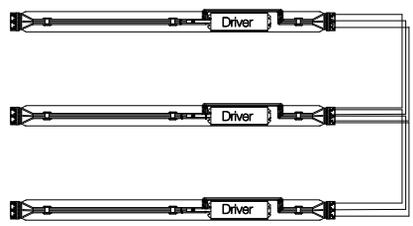

Fig. 3

3 Vertical connection(ONE SWITCH CONTROL) , Can choose three core wires(use for general lighting & Motion sensor:L,N,E) .

4 Lateral connection (switch 1 is on, fixture L1 connect power L is on, others are off)

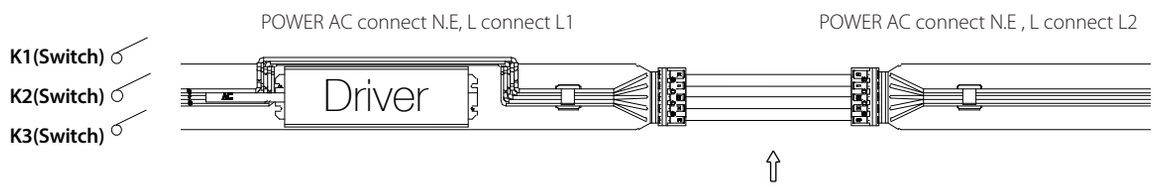

Fig. 4

- Please Note:All the operations must be in the condition of power off
- The luminaires are intended for indoor use or under shelter for outdoor use.

7. Packaging

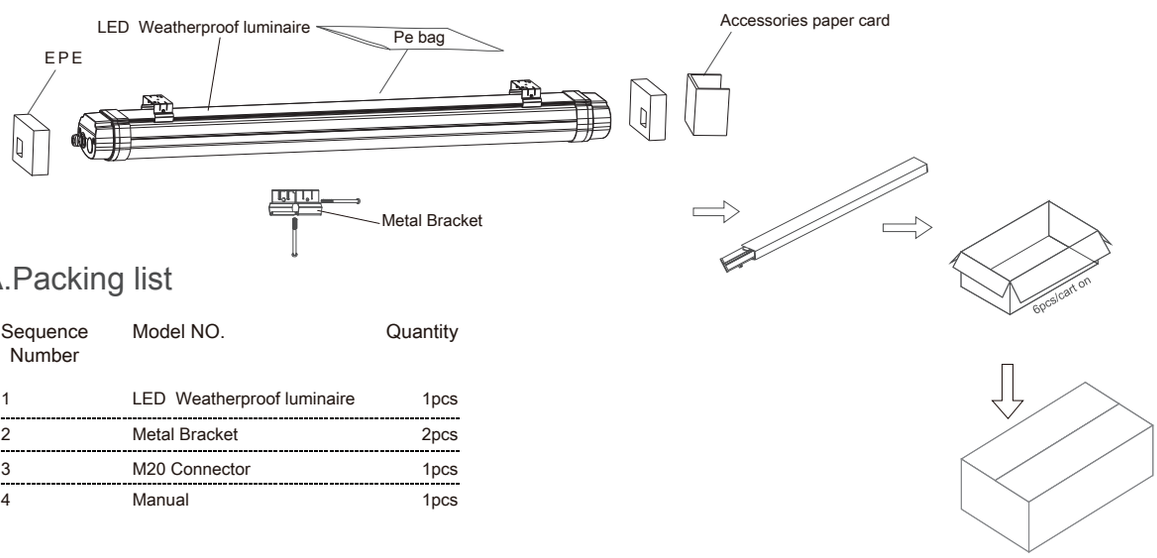

A.Packing list

Sequence Number	Model NO.	Quantity
1	LED Weatherproof luminaire	1pcs
2	Metal Bracket	2pcs
3	M20 Connector	1pcs
4	Manual	1pcs

B.Packing Data

Model No	Single Box	Pcs/CTN	N.W./Panel(kg)	G.W./CTN(kg)	Meas(mm)
T21 600mm	1	6	1.76	12.86	752x395x210
T21 1200mm	1	6	2.76	20.24	1352x395x210
T21 1500mm	1	6	3.34	24.28	1652x395x210

8. Attention

This specification is for reference only,we reserve the right to change without notice.If you need the updated info,please contact local distributors or visit our website at http://www.ervan.cn

This product is non-resistant to some chemical substances,please contact the manufacturer for the details.

ERVAN reserves the right of final explanation.

9. Statement

According to the International Standard of LED luminaire, here ERVAN formally claims that ERVAN LED Tri-proof(Weather proof) series products is only allowed to be applied to indoor or semi-outdoor neutral environment. Meanwhile ERVAN promises full warranty for the products.

Any severe environment application including high/low temperature, high humidity, high salinity, high-ammonia etc..is not permitted without the official confirmation from the manufacturer. If any misapplication happens, the warranty policy is no longer guaranteed.